Accessories
Mounting accessories

Z 119.025

Part number	
Z 119.025	Adaptor plate for clamping flange, mounting by eccentric fixings (order separately)

Suitable for
G0355, GA240, GI355, GI357, GPI0W, GXA1W, GXN1W, GXP2W, GXP6W

Dimensions

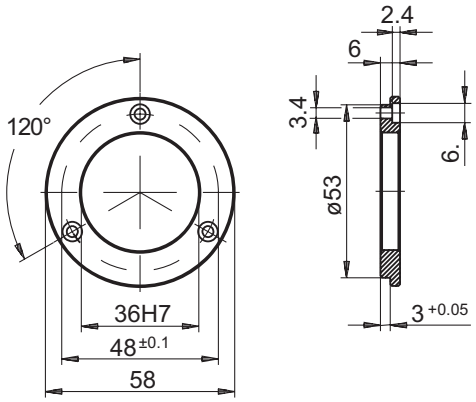

5/4/2012 Subject to modification in technic and design. Errors and omissions excepted.